AVAHUM

Model：CFT320P

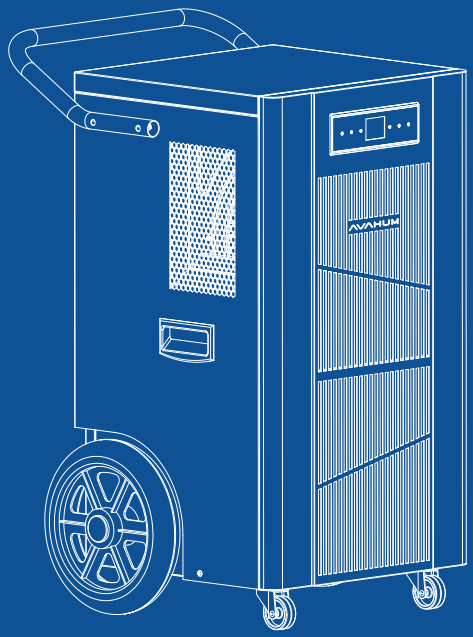

Thank you for your order.
You made our day.

Thanks for your purchase.
If any problems with our dehumidifier, please feel free to contact us.

Please refer to the model on the nameplate of the machine.
Please read the user manual carefully before use and keep it properly.

E-Mail: Support@avahum.com
http: // www.avahum.com

Thank for your purchase.

Warm Tips:
When the machine needs to be moved and when it is not used for a long time, please use the “Pump” button to force the machine to empty the residual water.

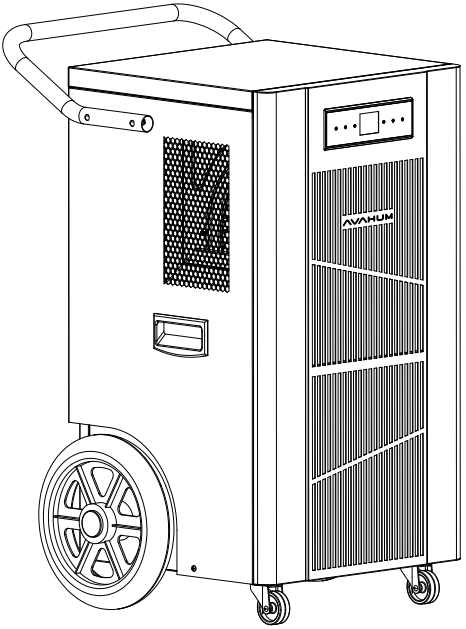

The “**Defrost**” indicator light indicates that the machine is defrosting, possibly due to a low ambient temperature.

The “**EC**” fault code indicates that the machine is malfunctioning.

If you experience any of these problems, please contact us and AVAHUM Customer Service will assist you.
Support@avahum.com
www.avahum.com

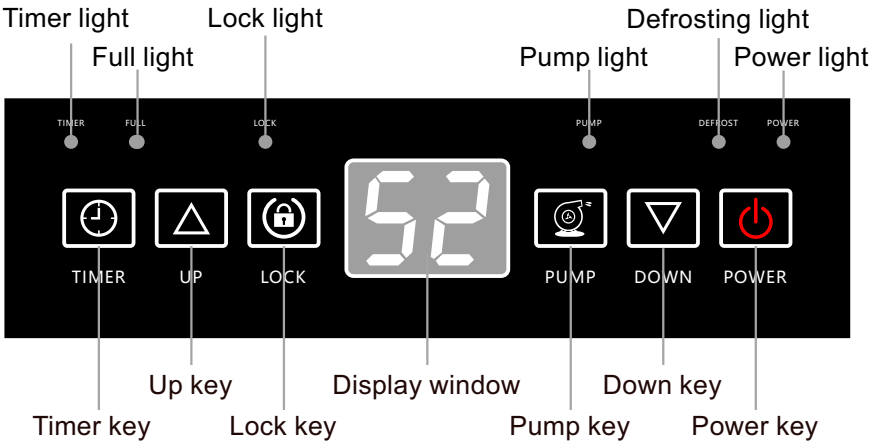

Power Key
To turn the machine on/off.

Timer Key
Used to set the time on the device, the setting range is 1-24h.

Up Key(Humidity Set)
Adjust the set humidity upwards.

Down Key(Humidity Set)
Adjust the set humidity downwards.

Lock Key(Long Press 3S)
For activation and deaction of the child lock function.

Pump Key (Used when moving and storing the machine)
Forced pump drainage to drain water left in the machine.

BEFORE FIRST USE:

Please leave the dehumidifier standing upright and outside the box for **24 HOURS** before plugging it in.

The dehumidifiers may have been tilted or placed upside down during shipping. Leave the dehumidifier to stand upright for 24 hours so the oil in the compressor can settle from the move, not doing so can affect the performance or lifespan of the dehumidifier.

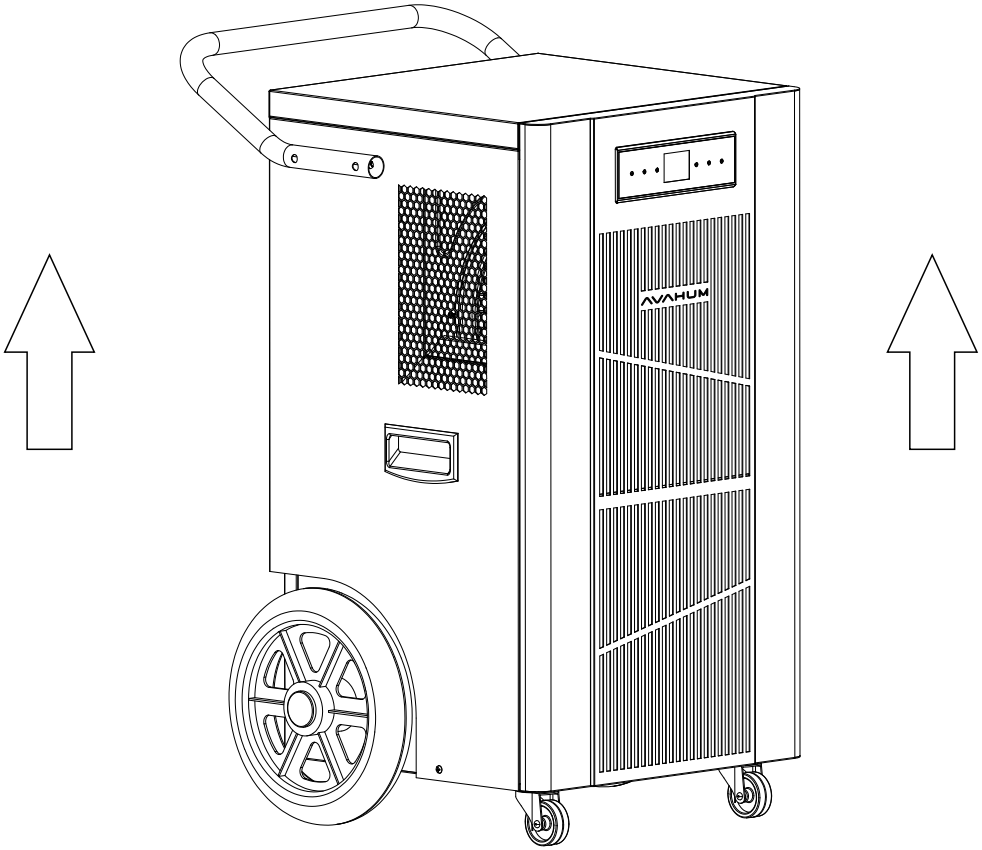

CONTENTS

Warning For Using R32 Refrigerant 1

Parts Identification 15

Operation Instructions 16

- Install the handle 16
- Position your dehumidifier 17
- Setting up the drainage system 17
- Plug in electrical cord 18
- Understand the control panel 19

Maintenance 24

- Cleaning the dehumidifier 24
- Cleaning the air filter 24
- When not using dehumidifier for long periods of time 25

Trouble Shooting Guide 26

- Trouble shooting chart 26

Specifications 28

Parts List 29

Limited Warranty 30

WARNING for Using R32 Refrigerant

Transportation, marking and storage for units that employ flammable refrigerants

General

The following information is provided for units that employ FLAMMABLE REFRIGERANTS.

Transport of equipment containing flammable refrigerants

Attention is drawn to the fact that additional transportation regulations may exist with respect to equipment containing flammable gas. The maximum number of pieces of equipment or the configuration of the equipment permitted to be transported together will be determined by the applicable transport regulations.

Marking of equipment using signs

Signs for similar appliances used in a work area are generally addressed by local regulations and give the minimum requirements for the provision of safety and/or health signs for a work location. All required signs are to be maintained and employers should ensure that employeesreceive suitable and sufficient instruction and training on the meaning of appropriate safety signs and the actions that need to be taken in connection with these signs.
The effectiveness of signs should not be diminished by too many signs being placed together. Any pictograms used should be as simple as possible and contain only essential details.

Disposal of equipment using flammable refrigerants

See national regulations.

Storage of equipment/appliances

The storage of the appliance should be in accordance with the applicable regulations or instructions, whichever is more stringent.

Storage of packed (unsold) equipment

Storage package protection should be constructed in such a way that mechanical damage to the equipment inside the package will not cause a leak of the REFRIGERANT CHARGE.

The maximum number of pieces of equipment permitted to be stored together will be determined by local regulations.

Requirements for operation, service and installation manuals of appliances using flammable refrigerants

WARNING

Do not use means to accelerate the defrosting process or to clean, other than those recommended by the manufacturer.

The appliance shall be stored in a room without continuously operating ignition sources (for example: open flames, an operating gas appliance or an operating electric heater. Do not pierce or burn.Be aware that refrigerants may not contain an odour.

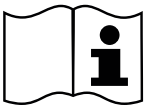
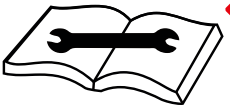

Refrigerant Safety Group A2L

Qualification of workers

The manual shall contain specific information about the required qualification of the working personnel for maintenance, service and repair operations. Every working procedure that affects safety means shall only be carried out by competent persons.

Examples for such working procedures are:

- breaking into the refrigerating circuit;
- opening of sealed components;

Competence of service personnel

General

Information of procedures additional to usual information for refrigerating appliance installation, repair, maintenance and decommission procedures is required when an appliance with FLAMMABLE REFRIGERANT is affected.
The training of these procedures is carried out by national training organisations or manufacturers that are accredited to teach the relevant national competency standards that may be set in legislation.
The achieved competence should be documented by a certificate.

Information and training

Ⅰ. The training should include the substance of the following.

Ⅱ. Information about the explosion potential of FLAMMABLE REFRIGERANTS to show that flammables may be dangerous when handled without care.

Ⅲ. Information about POTENTIAL IGNITION SOURCES, especially those that are not obvious, such as lighters, light switches, vacuum cleaners, electric heaters.

Ⅳ. Information about the different safety concepts:

- Unventilated-Safety of the appliance does not depend on ventilation of the housing.
- Switching off the appliance or opening of the housing has no significant effect on the safety.
- Nevertheless, it is possible that leaking refrigerant may accumulate inside the enclosure and flammable atmosphere will be released when the enclosure is opened.
- Ventilated enclosure-Safety of the appliance depends on ventilation of the housing.
- Switching off the appliance or opening of the enclosure has a significant effect on the safety.
- Care should be taken to ensure sufficient ventilation before.
- Ventilated room -Safety of the appliance depends on the ventilation of the room.
- Switching off the appliance or opening of the housing has no significant effect on the safety.
- The ventilation of the room shall not be switched off during repair procedures.

Ⅴ. Information about refrigerant detectors:

- Principle of function, including influences on the operation.
- Procedures, how to repair, check or replace a refrigerant detector or parts of it in a safe way.
- Procedures, how to disable a refrigerant detector in case of repair work on the refrigerant carrying parts.

Ⅵ. Information about the concept of sealed components and sealed enclosures according to IEC60079-15:2010.

Ⅶ. Information about the correct working procedures:

a)Commissioning

- Ensure that the floor area is sufficient for the REFRIGERANT CHARGE or that the ventilation duct is assembled in a correct manner.
- Connect the pipes and carry out a leak test before charging with refrigerant.
- Check safety equipment before putting into service.

b) Maintenance

- Portable equipment shall be repaired outside or in a workshop specially equipped for servicing units with FLAMMABLE REFRIGERANTS.
- Ensure sufficient ventilation at the repair place.
- Be aware that malfunction of the equipment may be caused by refrigerant loss and a refrigerant leak is possible.
- Discharge capacitors in a way that won’t cause any spark. The standard procedure to short circuit the capacitor terminals usually creates sparks.
- Reassemble sealed enclosures accurately. If seals are worn, replace them.
- Check safety equipment before putting into service.

c) Repair

- Portable equipment shall be repaired outside or in a workshop specially equipped for servicing units with FLAMMABLE REFRIGERANTS.
- Ensure sufficient ventilation at the repair place.
- Be aware that malfunction of the equipment may be caused by refrigerant loss and a refrigerant leak is possible.
- Discharge capacitors in a way that won’t cause any spark.
- When brazing is required, the following procedures shall be carried out in the right order:

  Remove the refrigerant. If the recovery is not required by national regulations, drain the refrigerant to the outside. Take care that the drained refrigerant will not cause any danger. In doubt, one person should guard the outlet.

Take special care that drained refrigerant will not float back into the building.

- Evacuate the refrigerant circuit.
- Purge the refrigerant circuit with nitrogen for 5 min (not required for A2L REFRIGERANTS).
- Evacuate again (not required for A2L REFRIGERANTS).
- Remove parts to be replaced by cutting, not by flame.
- Purge the braze point with nitrogen during the brazing procedure.
- Carry out a leak test before charging with refrigerant.
  - Reassemble sealed enclosures accurately. If seals are worn, replace them.
  - Check safety equipment before putting into service.

d) Disposal

- Ensure sufficient ventilation at the working place.
- Remove the refrigerant. If the recovery is not required by national regulations, drain the refrigerant to the outside. Take care that the drained refrigerant will not cause any danger.

  In doubt, one person should guard the outlet. Take special care that drained refrigerant will not float back into the building.
- When flammable refrigerants are used,

- Evacuate the refrigerant circuit.
- Purge the refrigerant circuit with oxygen free nitrogen.
- Evacuate again. (not required for A2L refrigerants);
- Cut out the compressor and drain the oil.

Information on servicing

General

The manual shall contain specific information for service personnel according.

Checks to the area

Prior to beginning work on systems containing FLAMMABLE REFRIGERANTS, safety checks are necessary to ensure that the risk of ignition is minimised.
For repair to the REFRIGERATING SYSTEM

Work procedure

Work shall be undertaken under a controlled procedure so as to minimise the risk of a flammable gas or vapour being present while the work is being performed.

General work area

All maintenance staff and others working in the local area shall be instructed on the nature of work being carried out. Work in confined spaces shall be avoided.

Checking for presence of refrigerant

The area shall be checked with an appropriate refrigerant detector prior to and during work, to ensure the technician is aware of potentially toxic or flammable atmospheres. Ensure that the leak detection equipment being used is suitable for use with all applicable refrigerants,i. e. non-sparking, adequately sealed or intrinsically safe.

Presence of fire extinguisher

If any hot work is to be conducted on the refrigerating equipment or any associated parts, appropriate fire extinguishing equipment shall be available to hand. Have a dry powder or CO^2 fire extinguisher adjacent to the charging area.

a) Commissioning

- Ensure that the floor area is sufficient for the REFRIGERANT CHARGE or that the ventilation duct is assembled in a correct manner.
- Connect the pipes and carry out a leak test before charging with refrigerant.
- Check safety equipment before putting into service.

b) Maintenance

- Portable equipment shall be repaired outside or in a workshop specially equipped for servicing units with FLAMMABLE REFRIGERANTS.
- Ensure sufficient ventilation at the repair place.
- Be aware that malfunction of the equipment may be caused by refrigerant loss and a refrigerant leak is possible.
- Discharge capacitors in a way that won’t cause any spark. The standard procedure to short circuit the capacitor terminals usually creates sparks.
- Reassemble sealed enclosures accurately. If seals are worn, replace them.
- Check safety equipment before putting into service.

c) Repair

- Portable equipment shall be repaired outside or in a workshop specially equipped for servicing units with FLAMMABLE REFRIGERANTS.
- Ensure sufficient ventilation at the repair place.
- Be aware that malfunction of the equipment may be caused by refrigerant loss and a refrigerant leak is possible.
- Discharge capacitors in a way that won't cause any spark.
- When brazing is required, the following procedures shall be carried out in the following order:

– Safely remove the refrigerant following local and national regulations. If the recovery is not required by national regulations, drain the refrigerant to the outside. Take care that the drained refrigerant will not cause any danger. In doubt, one person should guard the outlet.

Take special care that drained refrigerant will not float back into the building;

d) Decommissioning

- If the safety is affected when the equipment is putted out of service, the REFRIGERANT CHARGE shall be removed before decommissioning.
- Ensure sufficient ventilation at the equipment location.
- Be aware that malfunction of the equipment may be caused by refrigerant loss and a refrigerant leak is possible.
- Discharge capacitors in a way that won't cause any spark.
- Remove the refrigerant. If the recovery is not required by national regulations, drain the refrigerant to the outside. Take care that the drained refrigerant will not cause any danger. In doubt, one person should guard the outlet. Take special care that drained refrigerant will not float back into the building.
- When FLAMMABLE REFRIGERANTS except A2L REFRIGERANTS are used,

– Evacuate the refrigerant circuit.

No ignition sources

No person carrying out work in relation to a REFRIGERATING SYSTEM which involves exposing any pipe work shall use any sources of ignition in such a manner that it may lead to the risk of fire or explosion. All possible ignition sources, including cigarette smoking, should be kept sufficiently far away from the site of installation, repairing, removing and disposal, during which refrigerant can possibly be released to the surrounding space.

Prior to work taking place, the area around the equipment is to be surveyed to make sure that there are no flammable hazards or ignition risks. “No Smoking” signs shall be displayed.

Ventilated area

Ensure that the area is in the open or that it is adequately ventilated before breaking into the system or conducting any hot work. A degree of ventilation shall continue during the period that the work is carried out. The ventilation should safely disperse any released refrigerant and preferably expel it externally into the atmosphere.

Checks to the refrigerating equipment

Where electrical components are being changed, they shall be fit for the purpose and to the correct specification. At all times the manufacturer’s maintenance and service guidelines shall be followed. If in doubt, consult the manufacturer’s technical department for assistance.
The following checks shall be applied to installations using.

FLAMMABLE REFRIGERANTS:

- The actual REFRIGERANT CHARGE is in accordance with the room size within which the refrigerant containing parts are installed;
- The ventilation machinery and outlets are operating adequately and are not obstructed;
- If an indirect refrigerating circuit is being used, the secondary circuit shall be checked for the presence of refrigerant;
- Marking to the equipment continues to be visible and legible. Markings and signs that are illegible shall be corrected;
- Refrigerating pipe or components are installed in a position where they are unlikely to be exposed to any substance which may corrode refrigerant containing components, unless the components are constructed of materials which are inherently resistant to being corroded or are suitably protected against being so corroded.

Checks to electrical devices

Repair and maintenance to electrical components shall include initial safety checks and component inspection procedures.

If a fault exists that could compromise safety, then no electrical supply shall be connected to the circuit until it is satisfactorily dealt with. If the fault cannot be corrected immediately but it is necessary to continue operation, an adequate temporary solution shall be used. This shall be reported to the owner of the equipment so all parties are advised.

Initial safety checks shall include:

- That capacitors are discharged: this shall be done in a safe manner to avoid possibility of sparking;
- That no live electrical components and wiring are exposed while charging, recovering or purging the system;
- That there is continuity of earth bonding.

Repairs to sealed components

Ⅰ. During repairs to sealed components, all electrical supplies shall be disconnected from the equipment being worked upon prior to any removal of sealed covers, etc.
If it is absolutely necessary to have an electrical supply to equipment during servicing, then a permanently operating form of leak detection shall be located at the most critical point to warn of a potentially hazardous situation.

Ⅱ. Sealed electrical components shall be replaced.

Repair to intrinsically safe components

Do not apply any permanent inductive or capacitance loads to the circuit without ensuring that this will not exceed the permissible voltage and current permitted for the equipment in use. Intrinsically safe components must be replaced.
Replace components only with parts specified by the manufacturer. Other parts may result in the ignition of refrigerant in the atmosphere from a leak.

Cabling

Check that cabling will not be subject to wear, corrosion, excessive pressure, vibration, sharp edges or any other adverse environmental effects. The check shall also take into account the effects of aging or continual vibration from sources such as compressors or fans.

Detection of flammable refrigerants

Under no circumstances shall potential sources of ignition be used in the searching for or detection of refrigerant leaks. A halide torch (or any other detector using a naked flame) shall not be used.

The following leak detection methods are deemed acceptable for all refrigerant systems. Electronic leak detectors may be used to detect refrigerant leaks but, in the case of FLAMMABLE REFRIGERANTS, the sensitivity may not be adequate, or may need re-calibration.

(Detection equipment shall be calibrated in a refrigerant-free area.)

Ensure that the detector is not a potential source of ignition and is suitable for the refrigerant used.

Leak detection equipment shall be set at a percentage of the LFL of the refrigerant and shall be calibrated to the refrigerant employed, and the appropriate percentage of gas (25 % maximum) is confirmed.

Leak detection fluids are also suitable for use with most refrigerants but the use of detergents containing chlorine shall be avoided as the chlorine may react with the refrigerant and corrode the copper pipe-work.

If a leak is suspected, all naked flames shall be removed/extinguished.

If a leakage of refrigerant is found which requires brazing, all of the refrigerant shall be recovered from the system, or isolated (by means of shut off valves) in a part of the system remote from the leak. Removal of refrigerant shall be according to Removal and evacuation.

Removal and evacuation

When breaking into the refrigerant circuit to make repairs -or for any other purpose

- Conventional procedures shall be used. However, for flammable refrigerants it is important that best practice be followed, since flammability is a consideration.

The following procedure shall be adhered to:

- Safely remove refrigerant following local and national regulations;
- Purge the circuit with inert gas(optional for A2L);
- Evacuate(optional for A2L);
- Continuously flush or purge with inert gas when using flame to open circuit ;and
- Open the circuit .

The refrigerant charge shall be recovered into the correct recovery cylinders if venting is not allowed by local and national codes. For appliances containing flammable refrigerants, the system shall be purged with oxygen-free nitrogen to render the appliance safe for flammable refrigerants.
This process might need to be repeated several times. Compressed air or oxygen shall not be used for purging refrigerant systems. For appliances containing flammable refrigerants, refrigerants purging shall be achieved by breaking the vacuum in the system with oxygen-free nitrogen and continuing to fill until the working pressure is achieved, then venting to atmosphere, and finally pulling down to a vacuum (optional for A2L). This process shall be repeated until no refrigerant is within the system (optional for A2L). When the final oxygen-free nitrogen charge is used, the system shall be vented down to atmospheric pressure to enable work to take place.
The outlet for the vacuum pump shall not be close to any potential ignition sources, and ventilation shall be available.

Charging procedures

In addition to conventional charging procedures, the following requirements shall be followed.

- Ensure that contamination of different refrigerants does not occur when using charging equipment. Hoses or lines shall be as short as possible to minimise the amount of refrigerant contained in them.
- Cylinders shall be kept in an appropriate position according to the instructions.
- Ensure that the REFRIGERATING SYSTEM is earthed prior to charging the system with refrigerant.
- Label the system when charging is complete (if not already).
- Extreme care shall be taken not to overfill the REFRIGERATING SYSTEM. Prior to recharging the system, it shall be pressure-tested with the appropriate purging gas. The system shall be leak-tested on completion of charging but prior to commissioning. A follow up leak test shall be carried out prior to leaving the site.

Decommissioning

Before carrying out this procedure, it is essential that the technician is completely familiar with the equipment and all its detail. It is recommended good practice that all refrigerants are recovered safely.

Prior to the task being carried out, an oil and refrigerant sample shall be taken in case analysis is required prior to re-use of recovered refrigerant.
It is essential that electrical power is available before the task is commenced.

a) Become familiar with the equipment and its operation.
b) Isolate system electrically.
c) Before attempting the procedure, ensure that:
   - Mechanical handling equipment is available, if required, for handling refrigerant cylinders;
   - All personal protective equipment is available and being used correctly;
   - The recovery process is supervised at all times by a competent person;
   - Recovery equipment and cylinders conform to the appropriate standards.
d) Pump down refrigerant system, if possible.
e) If a vacuum is not possible, make a manifold so that refrigerant can be removed from various parts of the system.
f) Make sure that cylinder is situated on the scales before recovery takes place.
g) Start the recovery machine and operate in accordance with instructions.
h) Do not overfill cylinders (no more than 80 % volume liquid charge).
i) Do not exceed the maximum working pressure of the cylinder, even temporarily.
j) When the cylinders have been filled correctly and the process completed, make sure that the cylinders and the equipment are removed from site promptly and all isolation valves on the equipment are closed off.
k) Recovered refrigerant shall not be charged into another REFRIGERATING SYSTEM unless it has been cleaned and checked.

Labelling

Equipment shall be labelled stating that it has been de-commissioned and emptied of refrigerant.
The label shall be dated and signed. For appliances containing FLAMMABLE REFRIGERANTS, ensure that there are labels on the equipment stating the equipment contains FLAMMABLE REFRIGERANT.

Recovery

When removing refrigerant from a system, either for servicing or decommissioning, it is recommended good practice that all refrigerants are removed safely. When transferring refrigerant into cylinders, ensure that only appropriate refrigerant recovery cylinders are employed.

Ensure that the correct number of cylinders for holding the total system charge is available. All cylinders to be used are designated for the recovered refrigerant and labelled for that refrigerant (i. e. special cylinders for the recovery of refrigerant). Cylinders shall be complete with pressure-relief valve and associated shut-off valves in good working order. Empty recovery cylinders are evacuated and, if possible, cooled before recovery occurs.
The recovery equipment shall be in good working order with a set of instructions concerning the equipment that is at hand and shall be suitable for the recovery of the flammable refrigerant.
If in doubt, the manufacturer should be consulted. In addition, a set of calibrated weighing scales shall be available and in good working order. Hoses shall be complete with leak-free disconnect couplings and in good condition.
The recovered refrigerant shall be processed according to local legislation in the correct recovery cylinder, and the relevant waste transfer note arranged. Do not mix refrigerants in recovery units and especially not in cylinders.
If compressors or compressor oils are to be removed, ensure that they have been evacuated to an acceptable level to make certain that flammable refrigerant does not remain within the lubricant.
The compressor body shall not be heated by an open flame or other ignition sources to accelerate this process. When oil is drained from a system, it shall be carried out safely.

General Safety Instruction

- The appliance is for indoor use only.
- Do not use the unit on a socket under repairs or not installed properly.
- Do not use the unit, follow these precautions:

A: Near to source of fire.
B: An area where oil is likely to splash.
C: An area exposed to direct sunlight.
D: An area where water is likely to splash.

- All the sockets must comply with the local electric safety requirements. If necessary, please check it for the requirements.
- Children should be supervised to ensure that they do not play with the appliance.
- If the supply cord is damaged, it must be replaced by the manufacturer, its service agent or similarly qualified persons in order to avoid a hazard.

- Children should be supervised to ensure that they do not play with the appliance.
- This appliance is not intended for use by persons (including children) with reduced physical, sensory or mental capabilities, or lack of experience and knowledge, unless they have been given supervision or instruction concerning use of the appliance by a person responsible for their safety.
- That the appliance shall be installed in accordance with national wiring regulations.
- The applicable operating temperature range for this unit is 41°F-95°F;
  Model Specifications for Fuse : 3.15A,250VAC;

Recycling

This marking indicates that this product should not be disposed with other household wastes. To prevent possible harm to the environment or human health from uncontrolled waste disposal recycle it responsibly to promote the sustainable reuse of material resources. To return your used device, please use the return and collection systems or contact the retailer where the product was purchased. They can take this product for environmental safe recycling.

Parts Identification

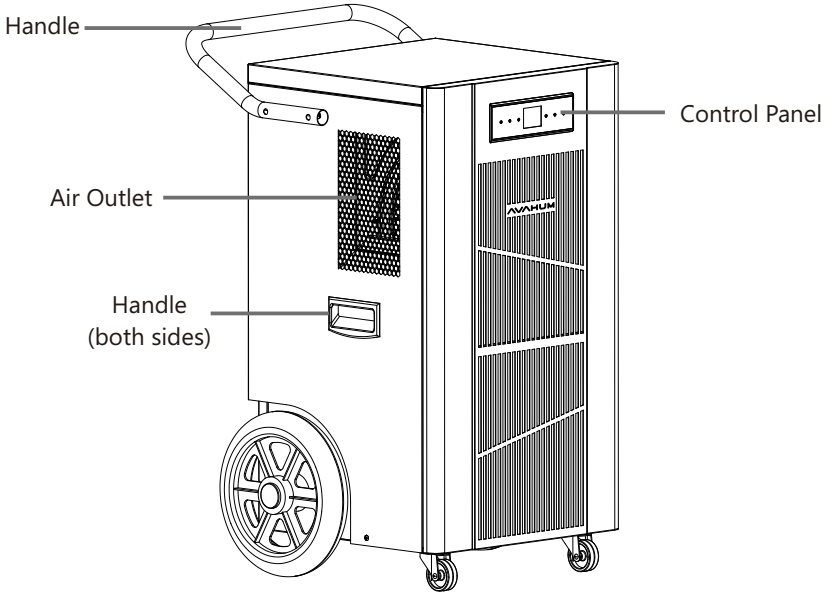

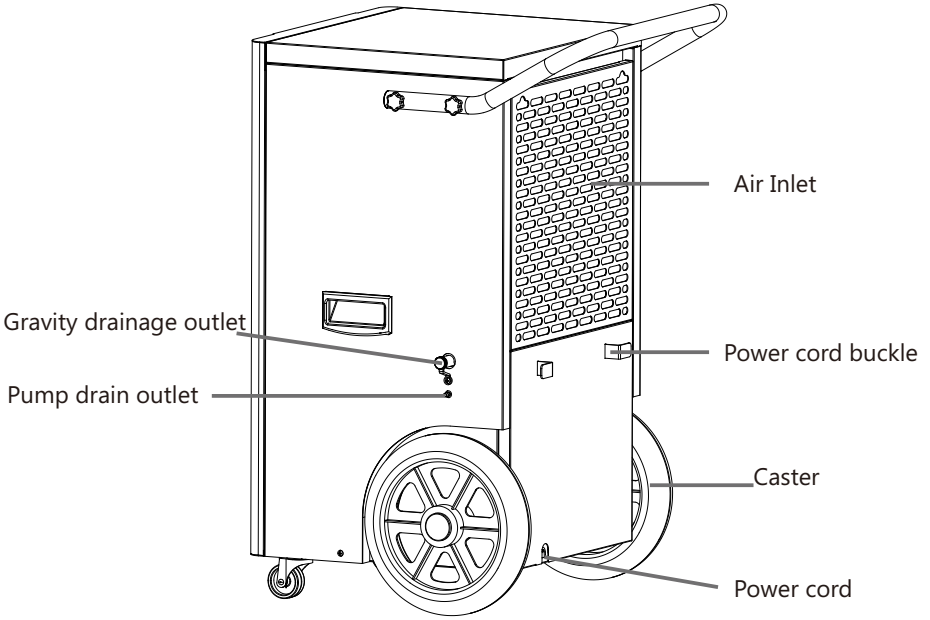

Note: Do not obstruct the air inlet and/or outlet.

Install the Handle

Ⅰ. Open the package as shown in the picture.

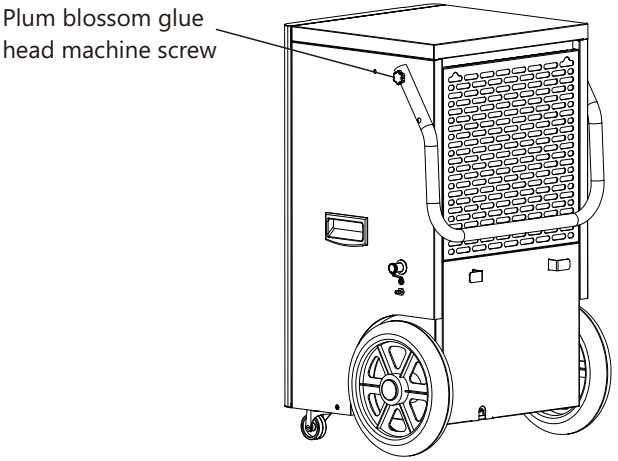

Ⅱ.Locate the M6 Torx screw provided in the manual pouch. Lift the handle and position it straight so that it aligns with the M6 nut holes, as shown in the figure. Tighten the Torx screws until the handle is securely fastened to the dehumidifier.

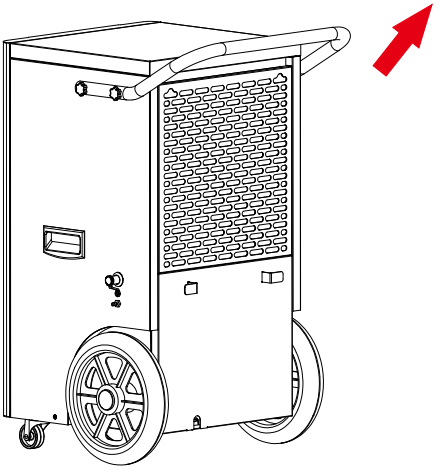

Position Your Dehumidifier

- For optimal outcomes, use your dehumidifier in a confined space.
- Shut all entryways and windows.
- Position it clear of obstructions and avoid anything that could obstruct airflow in or out of the dehumidifier.

Note: Place the dehumidifier on a flat surface to minimize vibration or noise.

Setting up the Drainage System

- The dehumidifier comes equipped with an internal pump for drainage, specially designed to handle upward drainage needs.

Note: To prevent any leakage, please ensure the drainage height does not exceed a distance of more than 16.4 feet from the drainage outlet.

- Please connect the provided drain hose to the outlet for secure and effective drainage.

Note: If an alternative drainage hose(inner diameter is 5/8 inch) is used, please ensure it is compatible with the drainage outlet to avoid any risk of leakage.

- During the drainage process, please keep the hose unobstructed and free from twists or kinks. This will enable the smooth removal of condensate water.

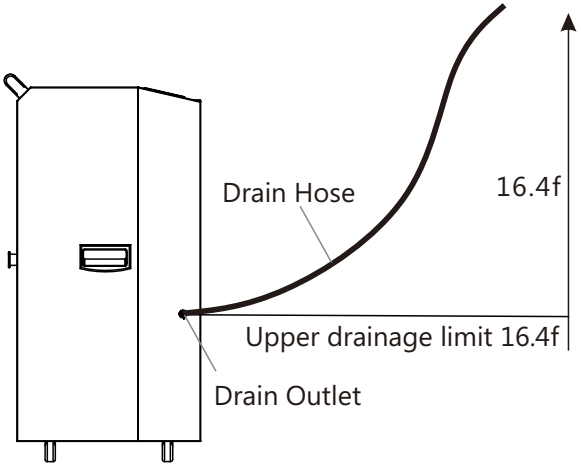

Plug in Electrical Cord

IMPORTANT

Please let the dehumidifier stand upright for **24 hours** before plugging in for the first time. During the shipping process, the dehumidifier may have been subjected to tilting or even placed upside down, which can cause the oil in the compressor to become unsettled. Failure to let the dehumidifier stand upright for the recommended duration can negatively impact its performance or even shorten its lifespan. Hence, kindly make sure to follow this crucial step before using the dehumidifier.

To properly operate the dehumidifier, please plug it into a GFCI-protected 115-volt outlet with a rating of at least **15 amps**. Uncoil the power cord and securely connect it to an appropriate outlet. (Recommended for compatibility with NEMA **5-20** socket.)

Note: When the dehumidifier is first plugged into AC power, the control panel display will light up for a second, which is part of the dehumidifier's self -diagnosis procedure and no action is required. This indicates that the dehumidifier is functioning correctly and ready to operate effectively. You will still need to press the POWER button to turn the dehumidifier on.
If not been operated for over 50 seconds, the control panel will become dime until pressed buttons again.

Understand the Control Panel

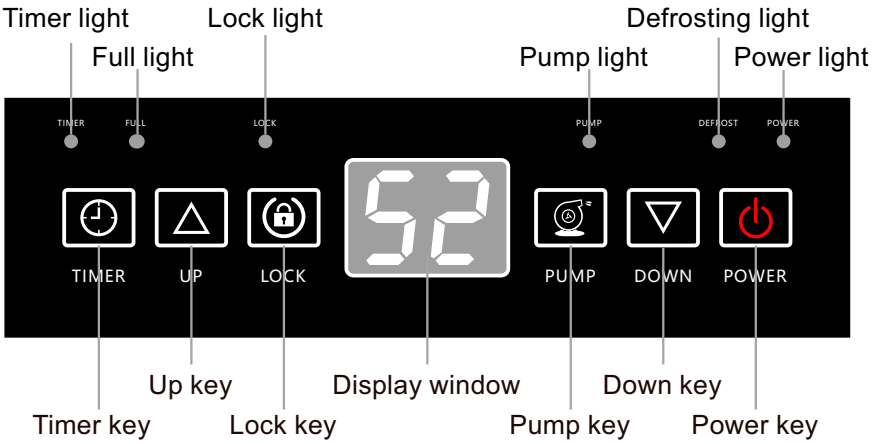

Power Key
To turn the machine on/off.

Timer Key
Used to set the time on the device, the setting range is 1-24h.

Up Key(Humidity Set)
Adjust the set humidity upwards.

Down Key(Humidity Set)
Adjust the set humidity downwards.

Lock Key(Press Hold 3S)
For activation and deaction of the child lock function.

Pump Key (Used when moving and storing the machine)
Forced pump drainage to drain water left in the machine.

Key description:

Power switch key: In the shutdown state, press once to turn on the machine, otherwise turn off the machine.

Up key: Increase the humidity setting value.

Down key: decrease the humidity setting value.

Timer key: used to set the timing time.

Lock key: For activation and deaction of the child lock function.(Press hold 3S)

Pump key: Forced pump drainage to drain water left in the machine (Used when moving and storing the machine)

Auto-Restart:

If the unit stops unexpectedly due to a power cut, it will restart with the previous function setting automatically when the power resumes.

Humidity setting:

In the power-on state, press the "Up" or "Down" key once to enter the humidity setting state: the display screen flashes the humidity setting value "* *". In the humidity setting state, press the "Up" or "Down" key to set the humidity, and the setting range is 10-98% RH. After the key operation is stopped for a few seconds,the humidity setting state is automatically exited.

Note: The humidity set-point is between 10% and 98%. A humidity setting between 40% and 60% is recommended for optimal comfort.

After selecting your target value, wait for 5 seconds for the setting to register automatically,which will ensure that your desired humidity level is set and maintained. Then, the dehumidifier will automatically stop and restart to maintain the room humidity level with in a range of +3% of the set point. For instance, if the set humidity is 50%, the dehumidifier automatically stops when the room humidity reaches 47% and then automatically restarts when the room humidity rises back to 53% or higher.

Timer setting:

Timed startup: When the set timing time is reached, the dehumidifier automatically starts, and the time range can be set to be 0-24 hours.

Timed shutdown: When the set timing time is reached, the dehumidifier automatically shuts down, and the time range can be set to be 0-24 hours.

NOTE:

- Before entering the AUTO ON TIMER setting, ensure that power is being supplied to the dehumidifier.
- For the AUTO ON setting, please turn on the dehumidifier to select a desired humidity level.Otherwise, it will be the same as the previous setting.
- Set AUTO ON timer only when the dehumidifier is off or set AUTO OFF timer when the dehumidifier is on, but not be able to set both AUTO ON and AUTO OFF timer at the same time.
- The AUTO ON/OFF function won't be cycling.
- The TIMER function will be disabled when the dehumidifier was powered on/off manually.

Set time to turn on (OFF)

- When the machine is turned off, connect the socket and do not press the "POWER"button. Press the "TiMER" button, and the timer indicator light will turn on. Then press the TIMER button to set the timer (1-24H). The device will automatically turnon when the set time is reached. After turning on, it will not automatically turn off. but will continue to run according to the set dehumidification target.
- When the machine is working normally for dehumidification, press the "TIMER" button to turn on the timer indicator light. Continue to press the "TIMER" button to set the timer (1-24H), and the machine will automatically shut down when the set time is reached. After shutting down, it will not automatically turn on unless manually turned on.

Example Query the remaining periodic time

Press "Timing". The time displayed in the display area of the dehumidifier control panel is the remaining reservation time. The original status will be displayed 5 seconds later.

Untiming

Press "Timing" key to enter the setting state of timing startup (shutdown), press "timing" key to adjust the time to 0 to cancel the setting of timing Settings, timing indicator off.

Change timing

If you need to change the timing time, reset the timing time.

LOCK Setting

To lock/unlock the Control Panel.

Press and hold the LOCK button for 3-5 seconds to lock or unlock the control panel. When the LOCK function has been activated,the indicator illuminates, and other buttons will be disabled.To regain use of the buttons,unlock the control button.

PUMP Button

Used to start the water pump.

Drainage

During operation, the pump will automatically pump the condensation out via the drain hose when the pump reservoir is full. No manual intervention! Before moving the dehumidifier, press and hold the PUMP button for 3-5 seconds to empty the pump reservoir to avoid water spillage. The PUMP indicator will light up when the pump is working. The pump will stop working automatically and the PUMP light will go off when the pump reservoir is almost empty.

TIPS:

The default program setting is gravity drainage. When you block the gravity drainage outlet, the condensed water is discharged through the water pump drainage outlet.

Action description:

Startup: The fan is turned on, and the compressor is turned on with a delay of several seconds.

Shutdown: The compressor is stopped immediately, and the fan is stopped after a delay of several seconds.

Without turning on the power supply, the compressor can be turned on again after it stops running for 3 minutes.

Defrosting function: When operating at low ambient temperature, the system will automatically judge whether there is frost, and if there is frost, it will automatically defrost.

Defrosting action: The fan does not stop and the compressor stops.

End of defrosting: The defrosting indicator is off, and the fan and compressor operate according to the humidity control requirements.

Defrost display: When defrosting, the defrosting indicator is on.

Note: Frequent defrosting indicates that the room temperature is too low. It is recommended to add heat when the room temperature is lower than 60°F for proper drying.

Fault Code

S/N	Error Code	Causes	Solutions
I	Ec (Ec) (Control Panel Communication Failure)	1. Faulty Main Control Board. 2. Faulty Display Panel. 3. Faulty Connection Cables.	1. Replace the main control board. 2. Replace the display panel. 3. Replace communication cables.

(Whether the above fault codes exist depends on whether the actual model has this function.)

Notice:

EC fails, operation of the machine is not controlled by the buttons on the operation panel. Please check whether the connection wire between the display board and the main control board is loose or poor contact caused by other reasons. If it is caused by looseness, please re-tighten it. If it is caused by loose wire terminals or broken wires, please contact a professional for repair.

*** Dealing with the above problems requires power off.**

State Description

- **Power On:** The fan starts running, and the compressor starts to run after a delay of a few seconds.
- **Power Off:** The compressor stops running immediately, and the fan stops after a few seconds delay.
- To prevent the machine from starting and stopping frequently, there is a 3-minute delay in the start-up interval.

Turn The Dehumidifier Off

Press the Power Switch to turn the dehumidifier off.

Note: To protect the compressor, the fan will continue to operate for 5 seconds after the dehumidifier has shut off. So please do not disconnect the power cord to force the dehumidifier to stop. Always use the power button.

Maintenance

Ensure the dehumidifier is turned OFF and the plug is removed from the power socket before cleaning or maintenance is carried out.

Cleaning the Dehumidifier

To clean the dehumidifier body, use a soft damp cloth. Do not submerge or pour water on the dehumidifier or control panel, as water can damage the electronic components. Avoid using chemical solvents such as benzene, alcohol, gasoline, or heavy-duty cleaners, as they can damage or deform the surface.

Cleaning the Air Filter

The air filter requires regular cleaning to maintain the dehumidifier's performance. Clean the air filter every 2 weeks, or more frequently if there's a significant amount of dander or fur in the air.

Follow the below steps to take the filter out

- **To remove the grill:** Hold the top part of both sides of the inlet grill and then pull upward to take the grill out, as illustrated below.

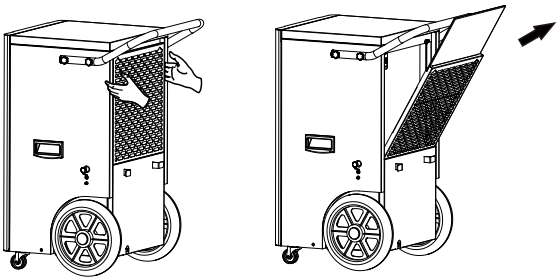

- **To remove the air filter:** Grasp the filter tab and pull it obliquely up to take out the entire filter, as illustrated below.

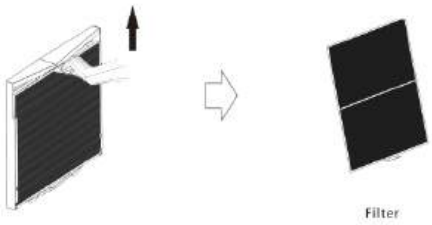

When Not Using the Dehumidifier for Long Periods of Time

- Wait for one day after turning off the dehumidifier to allow it to drain completely.
- Clean the dehumidifier and air filter thoroughly, ensuring that the dehumidifier is dry before storing it.
- Wrap the cord and hose and bundle them up to keep them safe.
- Cover the dehumidifier with a plastic bag.
- Store the dehumidifier upright in a dry, well-ventilated place.

Trouble Shooting Guide

Trouble shooting Chart

Below chart will help you solve common problems may occur. If the problem coming across can not be fixed after troubleshooting or not being listed in the below troubleshooting chart, please contact AVAHUM customer service to get professional **support@avahum.com.**

Problem	Possible Cause	Solution
Dehumidifier does not operate	No power to dehumidifier	Plug it into a working outlet
	Not turned on	Turn the dehumidifier on
	Has not set it properly	Make sure the set humidity level is at 3% lower than the inlet humidity reading
	Error code displays	Contact customer service
Dehumidifier collects little water	Too low humidity level	Try again until the humidity level exceeds 40%
	Insufficient working time	Allow more working time
	Filter is blocked	Clean filter
	Air Inlet or Outlet is blocked	Clear the obstructions
	Low ambient temperature	Heat up the room
	Condensate hose is blocked	Check hose for restrictions
Dehumidifier operating, but room not dry	Doors and windows are open	Seal room from external areas

Problem	Possible Cause	Solution
Abnormal Noise	The dehumidifier has not been placed properly	Place the dehumidifier in a horizontal position
	Filter is blocked	Clean filter
Humidity reading remains at 10RH%, (far from the actual room humidity)	Humidity sensor failure	Set the target humidity percentage value at 10RH%, the dehumidifier works normally, which means this failure does not affect the function of this dehumidifier.
		Repair and replace the humidity sensor.
Humidity reading remains at "99%RH" (far from the actual room humidity)	Water on the surface of the humidity sensor	Please let the dehumidifier work for a period of time, the humidity reading will get normal after the water on the surface of the humidity sensor is evaporated.
	Humidity sensor failure	The dehumidifier works normally, which means this problem does not affect the function of this dehumidifier.
		Repair and replace the humidity sensor.

Note: It is normal that the dehumidifier pulls warm air out.

If you have an issue with an AVAHUM Product,Please Contact AVAHUM to Serve **Support@avahum.com**

Specifications

DEHUMIDIFIER	
MODEL	CFT320P
POWER SOURCE	120V~60Hz
RATED POWER	1700W
RATED CURRENT	15.0A
INPUT POWER(80℉,60%RH)	1100W
INPUT CURRENT(80℉,60%RH)	11A
MOISTURE REMOVAL CAPACITY(65℉,60%RH)	85 Pints/Day
MOISTURE REMOVAL (80℉,60%RH)	130 Pints/Day
MOISTURE REMOVAL(86℉,80%RH)	230 Pints/Day
MOISTURE REMOVAL (95℉,90%RH)	320 Pints/Day
MOTOR FLA	1.3A
MOTOR COMPRESSOR	RLA:13.5A LRA:54A
REFRIGERANT	R32/485g(17.1ozs)
MAXIMUM ALLOWABLE PRESSURE	6.5MPa
MAXIMUM ALLOWABLE DISCHARGE PRESSURE	4.0MPa
MAXIMUM ALLOWABLE SUCTION PRESSURE	1.7MPa

Parts List

Picture	Name	Quantity
	Pump Drain hose	1PC
	Machine tooth screws with rubber head	4PCS
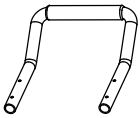	Handle	1PC
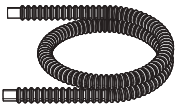	Drain Hose	1PC
	Drain Pipes Fastening Rings	1PC

Limited Warranty

Warranty and Service

If you have an issue with an AVAHUM product, please contact us at **Support@avahum.com** , and we will do our best to resolve it for you.

Support Hours

24 Hours available
*Please have your order number before contacting customer support.
www.avahum.com

Product Certification

The product is approved to leave the factory after passing the inspection.
Production date: see the nameplate or barcode of the fuselage

Pass
OQC

Scan the code for support

AVAHUM